World Leader
in Concrete Vibrators

Review 1 . From serial number nr 84265901

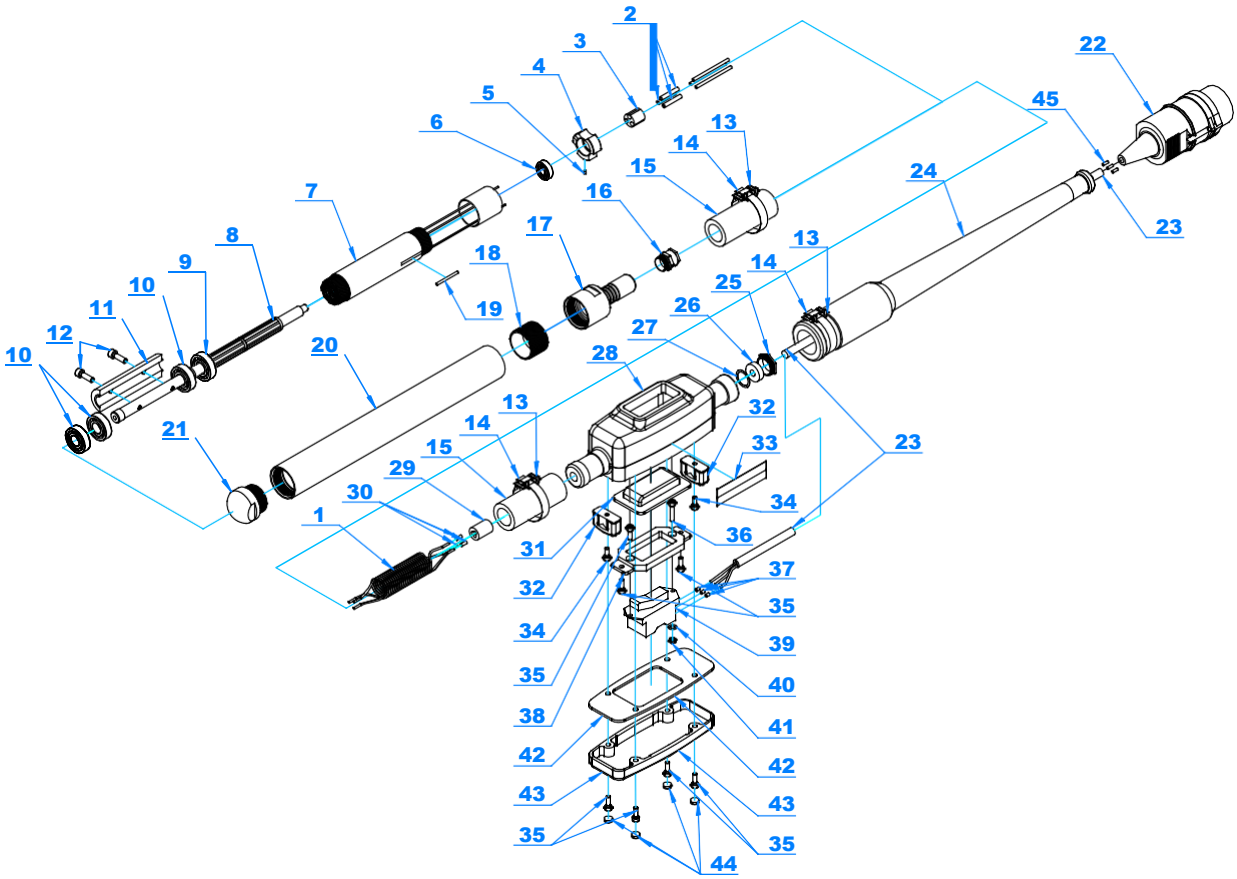

	ARTICLE	DESCRIPTION	QUANTITY
0	82012-10	HEAD POKER M6AFP-T	1.0000
1	81619	SPRING INTERNAL CABLE	1.0000
2	103720	THROUGH CONNECTOR 2.5	3.0000
3	81622	SPACER CABLE	1.0000
4	82006	REAR BEARING SUPPORT	1.0000
5	103375	SPLIT PIN CIL. DIN6325 2,5×6	1.0000
6	101151	BEARING 6000 Z C3	1.0000
7	8E160S0	STATOR	1.0000
8	8R060A	ROTOR	1.0000
10	101216	BEARING 6204 C4 *	4.0000
11	82033	ECCENTRIC	1.0000
12	102332	ALLEN BOLT M 8×20 DIN 912 8.8	2.0000
13	107080	STAINLESS STRAP C.203 9,6×0,65 30,5m	1.0000
14	107081	BUCKLE BAND-IT C253 (3/8)	3.0000
15	81620	HOSE	1.0000
16	103906	PACKING GLAND M20 ref. 22052dm 3×5,3	1.0000
17	82038	CLOSING HOSE	1.0000
18	82034	JOINT SLEEVE	1.0000
19	81609	BAR DIA.2,5x30 mm	1.0000
20	82044	TUBE	1.0000
21	82031	CAP	1.0000
22	103784	PLUG 3P 40/50V 32A 200 Hz	1.0000
23	103915	CABLE H07 RN-F 3x4 mm	10.0000
24	81615	REINFORCEMENT CABLE	1.0000
25	103867	PACKING GLAND NICKEL PG16	1.0000
26	103865	PRECUT JOINT PG16	1.0000
27	103866	WASHER GALV. STEEL PG16	1.0000
28	81610	BOX SWITCH	1.0000
29	81623	WIRE FEED UNIT	1.0000
30	103829	CABLE END SLEEVE w/o INS. 2,5x7	3.0000
31	81613	SEAL SWITCH	1.0000
32	103834	CLAMP JSL REF. 905	2.0000
33	107228	SAFETY STICKER	1.0000

	ARTICLE	DESCRIPTION	QUANTITY
34	102303	ALLEN BOLT M 4×10 DIN 912 8.8	2.0000
35	102301	ALLEN BOLT M 4×14 DIN 912 8.8	7.0000
36	103868	CABLE END SLEEVE w/o INS. 4x9	3.0000
37	102299	ALLEN BOLT M 4×20 DIN 912 8.8	1.0000
38	81630	HOLDER SWITCH	1.0000
39	103753	SWITCH MARQUARDT 0344.0201	1.0000
40	102178	FLAT WASHER 5 DIN 9021	1.0000
41	102204	HEXAGONAL NUT M 4 DIN 934 5.6	1.0000
42	81614	SEAL PLUG	1.0000
43	81612	SWITCH COVER	1.0000
44	81627	BOLT CAP	4.0000
45	103932	CABLE END SLEEVE w/o INS. 4×12	3.0000